KOMATSU

CK50-8



Compact track loader

Engine power
53.7 kW / 72.0 HP @ 2500 rpm

Operating weight
5290 kg

Operating capacity
Standard bucket (0.45 m^3): 1630 kg
"Deep profile" bucket (0.50 m^3): 1490 kg

CK50-8





Engine power
53.7 kW / 72.0 HP @ 2500 rpm

Operating weight
5290 kg

Operating capacity
1630 kg Standard bucket (0.45 m^3)
1490 kg "Deep profile" bucket (0.50 m^3)

Industry-leading hydraulics for **powerful attachment handling**

Flexibility on the jobsite

- Outstanding stability with an operating capacity of more than 1.6 tonnes
- Easy operation with ride control, return-to-dig, self-levelling, and three drive modes, including slow speed control
- Improved efficiency with an axial piston pump for the work equipment
- Higher breakout force from a redesigned loader arm and pressure relief lines for work equipment and auxiliary hydraulics

Powerful and environmentally friendly

- Full compliance with EU Stage V emission regulations using DPF
- Drawbar pull, bucket breakout force, lifting pin height, and lifting cylinder force are all at the highest level in this class

Safety first

- Improved visibility with rear-view camera
- Enhanced safety with Human Detection System (option)
- Compliance with the latest safety standards, including EN474 and ISO19014
- LED lighting system
- FOPS level 2 top guard (option)
- Secondary engine shutdown switch
- Seat belt caution indicator
- Anti-theft via monitor password lock

Operator comfort

- Wide cabin with optional air conditioning and a gas-spring-assisted pull-up sliding door
- Suspended operator console and fully adjustable air-suspended seat providing the highest operator comfort
- Pressurised cab to maintain a clean operator environment
- Multi-function high-res touchscreen monitor with 5-inch display and EPC control levers
- Details like USB charger and a Bluetooth® radio further improve operator convenience

Total versatility

- Proportional attachment flow control using an electronically controlled main valve
- Flexible attachment pairing with five optional aux ports (three standard ports)
- Enhanced working mode performance with an electronically controlled HST pump
- “Super Flow” (with drain line and electric connection) is standard

Easy maintenance

- Easy maintenance access through larger inspection area and rearward tilting cabin
- Hydraulically driven, reversible cooling fan facilitating cleaning
- Comprehensive maintenance information shown on the monitor
- 500 hour engine oil service interval

Komtrax

- Komatsu Wireless Monitoring System
- 4G mobile communications
- Error code display
- Integrated communication antenna

Powerful and environmentally friendly



Komatsu EU Stage V engine

The Komatsu EU Stage V engine is productive, dependable and efficient. Equipped with a Diesel particulate filter (DPF), without the need of an SCR aftertreatment system, it delivers ultra-low emissions, providing a lower environmental impact and superior performance. A long 6000 hour DPF cleaning interval further minimises maintenance requirements, helping to lower operating costs and allowing the operator to work with complete peace of mind.

High stability and operating capacity

Delivering top-class performance, the machine achieves outstanding stability, drawbar pull, lifting pin height, lifting cylinder force and a best-in-class operating capacity of over 1.6 t. This is further supported by a redesigned loader arm and optimised pressure relief lines, resulting in increased breakout force and superior hydraulic performance for demanding applications.

Vertical lift

The design of the vertical lift arm makes this model particularly suited for loading and unloading operations, particularly with a pallet fork. And because of this special design, the CK50-8 keeps the bucket reach constant throughout the whole trajectory. This allows higher tipping loads than for conventional models, along with increased ease-of-use and safety when working at maximum height.

Powerful attachment handling

Extreme power, total control

Engine and pumps are positioned along the same axis, ensuring direct power distribution without the need for side belt transmissions. An axial piston pump for the work equipment and the HST travel pump ensure high efficiency and responsive performance, while the proportional attachment flow control via an electronically controlled main valve enables smooth and accurate operation. Up to five auxiliary ports (three standard) allow flexible pairing with a wide range of attachments.



Optional Tool Control System

Designed for customers using multiple hydraulic attachments with specific flow and pressure requirements, this system allows easy selection and adjustment of hydraulic parameters, including pressure settings from 150 to 270 bar. It ensures optimal attachment setup, reduces machine stress, improves fuel efficiency, and minimises the risk of incorrect use and damaged attachments.

Multiple attachments

A wide range of attachments can be used with this machine, on many different job sites. Perfect for an everyday use on farms, building yards, industrial environments or harbours, the Komatsu compact track loader stands in for manual labour with unparalleled versatility. The CK50-8 is equipped as standard with a “Super Flow” hydraulic system, providing the power and flexibility required for specialised attachments and demanding applications.





First-class comfort



Operator-focused cab design

A spacious cab, with a wide entrance and comfortable seat, provides a level of comfort that is unmatched in this class of machines. Designed with the operator in mind, the cab can be equipped with optional air conditioning to ensure a pleasant working environment in all weather conditions. A large gas-spring-assisted pull-up sliding door allows for smooth and effortless access as well as good visibility of the attachment.

Comfortable and clean work environment

A suspended operator console and a fully adjustable, air-suspended seat significantly reduce vibrations. With the lowest inside-cab operator noise in the industry, the working environment is exceptionally quiet and comfortable. This delivers maximum comfort even during long working hours. The pressurised cab helps maintain a clean, dust-free environment.

Completely redesigned monitoring system

A multi-function high-resolution touchscreen monitor with a 5-inch display is integrated into the safety bar and complemented by precise EPC control levers for smooth and accurate machine handling. Alerts and useful data such as operation records, machine settings, and maintenance information are easily accessible. The operator comfort is further improved by features such as a USB charger and a Bluetooth® radio.


KOMATSU
CK
50
100

Operator assistance systems



Increased efficiency

Thanks to a range of assistance functions, accessible via the monitor system, the CK50-8 offers highest efficiency levels and improved precision across all types of work.

Versatile attachment management

The auxiliary line controls provide highly versatile attachment management, offering proportional flow control from 40 to 80 l/min and ON/OFF operation from 100 to 140 l/min via a dedicated joystick button. This ensures easy and efficient operation across a wide range of hydraulic attachments.

Advanced bucket control functions

The return-to-dig function enables the bucket to automatically return to a preset digging angle, reducing repetitive manual adjustments during loading cycles. The bucket shaking function delivers controlled oscillations of the bucket, making it easier to remove material build-up or evenly spread stones and gravel. The auto self-levelling function automatically adjusts the bucket position relative to the ground based on lift height, helping to prevent material spillage and ensuring consistent grading results.

Various travel speed settings

Slow speed control allows the operator to select from 20 different travel speeds between 0 and 4 km/h in proportional steps, providing precise control through the LH joystick roller. Cruise control is also available for maintaining a constant low speed during operation. The travel response can be adapted to match operator preference and job requirements, while ride control improves comfort during travel by reducing pressure in the loader arm lift cylinders, engaging from 6 km/h.

KOMTRAX



The way to higher productivity

Komtrax turns telematics data into actionable insights for your fleet and equipment, empowering your business to make well-informed, data-driven decisions. By creating a tightly integrated web of support, Komtrax allows for proactive and preventive maintenance to minimise downtime and facilitate peak machine performance.
Komtrax lets you check your equipment status anytime from any device, keeping you connected wherever you are. It provides precise location tracking with geofencing, along with clear insights into machine condition, maintenance needs, and any warnings or errors. Engine password setup adds an extra layer of security to prevent unauthorized use.



Easy maintenance

Easy access to inspection points

Maintenance information is conveniently displayed on the 5-inch screen integrated into the safety bar. Routine maintenance and check-ups can be performed by simply opening a rear bonnet that offers a larger inspection area and allows the user to clean the inclinable radiator. A 250-hour greasing interval, along with no requirement for an SCR aftertreatment system, helps reduce service frequency and operating costs.

Tilting cab

For extra servicing, the rearward tilting cab offers complete access to the transmission and to the main components of the optimised hydraulic system, which reduces down time and maintenance costs.



Reversible radiator fan

By a touch on the monitor panel, the radiator can be cleaned easily with a reversible, hydraulically driven cooling fan. A clean radiator reduces fuel consumption and increases overall machine performance.



Easy access to daily maintenance points



The tiltable cab can be raised in just a few minutes, providing easy access to the main valve and key hydraulic components

Safety first







Operator safety

A modern LED lighting system provides excellent visibility in low-light conditions, while an optional FOPS Level 2 top guard offers additional protection against falling objects in demanding environments. Additional safety features include a secondary engine shutdown switch for emergency situations and a seat belt caution indicator to promote proper operator use.

Machine protection

The machine is designed in compliance with the latest safety standards, including EN474 and ISO 19014, ensuring a high level of operational safety and reliability. An anti-theft system with password protection via the monitor helps safeguard the machine against unauthorised access.

Dust package (option)

An optional additional dust protection package is available to enhance machine durability in harsh working conditions. It includes a hydraulic piping protection cover between the drive sprocket and the frame, a protective cover between the cab and the frame, and a gasket between the cab and the rear frame. These measures help prevent dust and mud from entering the machine structure, reducing the risk of piping damage and wear. The package also keeps the hydraulic pump area under the cab cleaner.

Rear-view camera

The machine is equipped with a high-definition rear-view camera as standard, providing clear visibility of the area behind the machine. The digital camera system displays the image on the 5-inch monitor and is automatically activated when reverse gear is engaged, supporting safer manoeuvring in confined or busy jobsite conditions.

Human detection system (option)

For enhanced safety, an optional human detection camera is available. This system detects the presence of people around the machine and triggers an audible alarm, helping to minimise the risk of accidents and ensuring maximum operational safety.

Specifications

Engine

Model	Komatsu S4D98E-6N1FE
Type	Common rail direct injection, water-cooled, emissionised, turbocharged, after-cooled diesel
Engine power	
at rated engine speed	2500 rpm
ISO 14396	53.7 kW / 72.0 HP
ISO 9249 (net engine power)	52.3 kW / 70.1 HP
No. of cylinders	4
Bore × stroke	98 × 110 mm
Displacement	3.32 l
Max. torque / engine speed	280 Nm / 1625 rpm
Cooling system	Water
Fuel	Diesel fuel, conforming to EN590 Class 2/Grade D. Paraffinic fuel capability (HVO, GTL, BTL), conforming to EN 15940:2016

Transmission

Type	Hydrostatic
Pumps	2 × variable displacement
Hydraulic motors	2 × axial pistons
No. of speeds	2
Max. travel speed	12.1 km/h
Electronically adjustable track response with three selectable settings (soft, medium, hard)	

Hydraulic system

Type	Komatsu CLSS
Hydraulic pump	Axial piston
Max. pump flow	80 l/min
Max. operating pressure	270 bar
Max. pump flow - "Super Flow"	140 l/min

Operating weight (appr.)

Operating weight, including cab, operator (75 kg), liquids, filled tank and standard equipment, air condition, rear LED lights (without bucket)	5070 kg
Standard bucket (2030 mm)	+ 221 kg
"Deep profile" bucket	+ 245 kg
Pallet forks	+ 188 kg
Bolt-on cutting edge	+ 45 kg
Additional counterweight	+ 127 kg
FOPS level 2 top guard	+ 81 kg

Loader

Standard bucket	
Operating capacity	1630 kg
with add. counterweight	1730 kg
Tipping load	4650 kg
Standard bucket capacity (ISO 7546)	0.45 m^3
Bucket breakout force (ISO 14397)	3777 daN (3850 kgf)
"Deep profile" bucket	
Operating capacity	1490 kg
with add. counterweight	1575 kg
Tipping load	4250 kg
Standard bucket capacity (ISO 7546)	0.50 m^3
Bucket breakout force (ISO 14397)	3443 daN (3510 kgf)
Lifting cylinder breakout force	3727 daN (3800 kgf)
Operating capacity with pallet forks*	1308 kg
Max. loading height with forks	3150 mm
Max. reach with forks	589 mm

*with add. counterweight

Tracks

Standard track width (rubber tracks)	450 mm
Ground pressure	0.33 kg/cm^2
Drawbar pull	4910 daN (5007 kgf)
Track rollers (each side)	5
3 double-flange track rollers	
2 triple-flange track rollers	
Track tensioning	Grease
Track tensioning incorporates the shock absorber	

Service refill capacities

Fuel tank	84 l
Cooling system	11 l
Engine oil	7.5 l
Hydraulic system	60 l
Final drive	1 l

Environment

Engine emissions	Fully complies with EU Stage V exhaust emission regulations
Noise levels	
LwA external	103 dB(A) (2000/14/EC Stage II)
LpA operator ear	79 dB(A) (ISO 6396 dynamic test)
Vibration levels (EN 12096:1997)	
Hand/arm	≤ 2.5 m/s^2 (uncertainty K = 1.2 m/s^2)
Body	≤ 0.5 m/s^2 (uncertainty K = 0.2 m/s^2)
Contains fluorinated greenhouse gas HFC-134a (GWP 1430). Quantity of gas 0.7 kg; CO_2 equivalent 1.0 t	

Dimensions

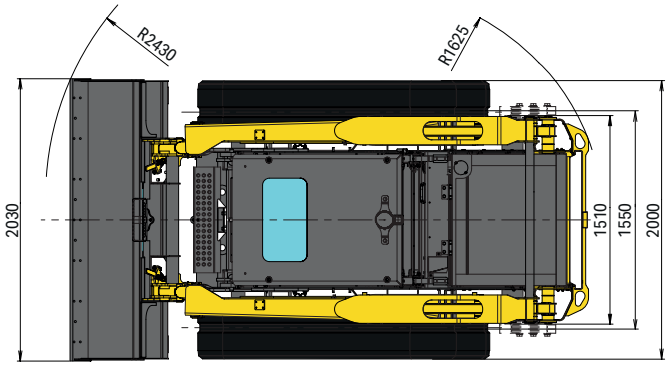
R2430
R1625
2030
1510
1550
2000

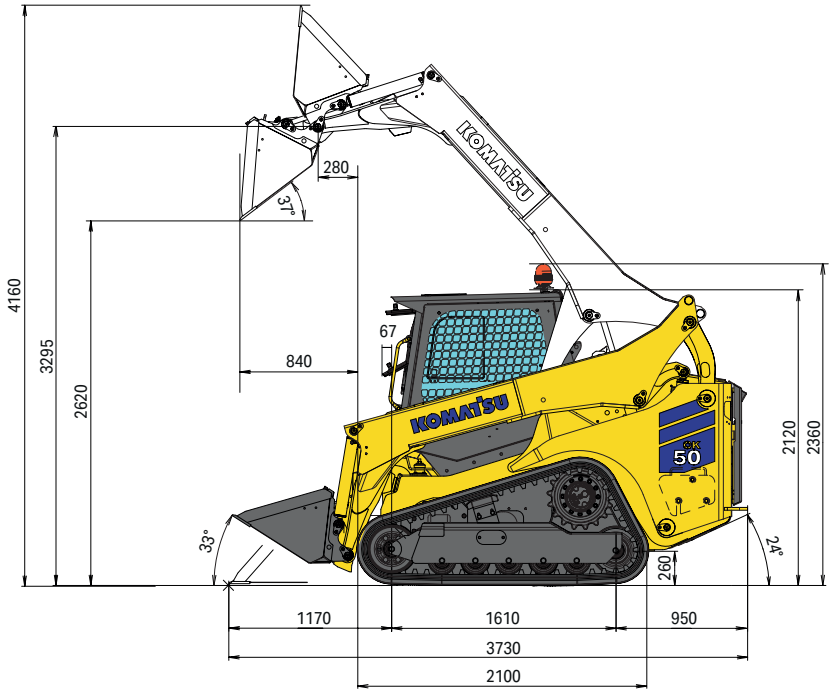
280
37°
4160
3295
2620
840
67
2120
2360
33°
24°
260
1170
1610
950
3730
2100

Standard and optional equipment

Engine

Komatsu S4D98E-6N1FE turbocharged common rail direct injection diesel engine	●
EU Stage V compliant	●
Cooled EGR system and diesel particulate filter (DPF)	●
Variable speed reversible hydraulic cooling fan	●
Alternator 80 A	●
Starter 3.0 kW	●
Batteries 12 V / 100 Ah	●

Transmission

2-speed transmission	●
Slow speed control system with cruise control function	●

Hydraulic system

Electronically controlled Komatsu main valve	●
Auxiliary hydraulic circuit for attachments	●
Universal mechanical quick-coupler	●
Bucket floating function	●
"Super Flow" version with 3 elements main valve (with drain line and electric connection)	●
3 pipes attachments auxiliary (1st auxiliary line) + drain to tank	●
14 pins attachment socket	●
5 pipes attachments auxiliary (2nd auxiliary line) (low flow 60 l/min)	○
Presetting for 5 pipes attachment auxiliary	○
Tool control: auxiliary line attachments pressure set up, up to 270 bar through a dedicated monitor function	○

Tracks

450 mm rubber shoes	●

LED lighting system

2 front working lights	●
2 front lights on loader arm	○
2 rear lights on frame	●
2 rear working lights	○

Cab

Pressurized ROPS (ISO 3471) / OPG (ISO 10262) level 1 tilting cab with heater, safety bar with incorporated 5" touchscreen, pull-up type sliding door and front wiper	●
Adjustable air suspension seat with 2-point seat belt (2")	●
Monitor system including: - Instant fuel consumption displayed - Weekly and monthly fuel records - Eco guidance - Maintenance menu - Service menu - Seat belt warning lamp - Engine lock password - Flow and pressure - Slow speed control bar - Integrated touch screen radio	●
Accelerator pedal and EPC levers	●
12 V internal power supply	●
DAB+ radio with Bluetooth® and USB (type A) port	●
USB (type A-C) port	●
Air conditioning	○
Cab with heater only	○
Sliding side windows	○

Safety equipment

Back-up alarm	●
Horn	●
Battery main switch	●
Rear-view camera	●
Rear-view camera with human detection system	○
Rotating beacon	○
Green beacon for fastened seatbelt	○
Accessories for road homologation	○
Rear-view mirrors	○
FOPS level 2 top guard	○
Dust and mud protection package	○

Service and maintenance

Komtrax – Komatsu wireless monitoring system (4G)	●
Rearward-tilting cab	●

Attachments

Standard bucket (2030 mm, 0.45 m^3)	●
"Deep profile" bucket (2030 mm, 0.50 m^3)	○
Cutting edge on teeth	○
Bolt-on cutting edge	○
Bucket teeth	○
Pallet forks	○

Other equipment

Bucket self-levelling function	●
Return-to-dig function	●
3 drive modes	●
Bucket shaking function	●
Slow speed	●
Lifting eyes	●
Lifting hooks for FOPS level 2 guard (tilting cab)	○
Additional modular rear counterweight (6 pieces, total 127 kg)	○
LSS (Load Stabiliser System)	○

Further equipment on request

● standard equipment
○ optional equipment

This specification sheet may contain attachments and optional equipment that are not available in your area. Please consult your local Komatsu distributor for those items you may require.
Materials and specifications are subject to change without notice.

Your Komatsu partner:

KOMATSU

komatsu.eu

© 2026 Komatsu Europe International N.V. All rights reserved. Printed in Europe. WENSS12400-02 09/2026